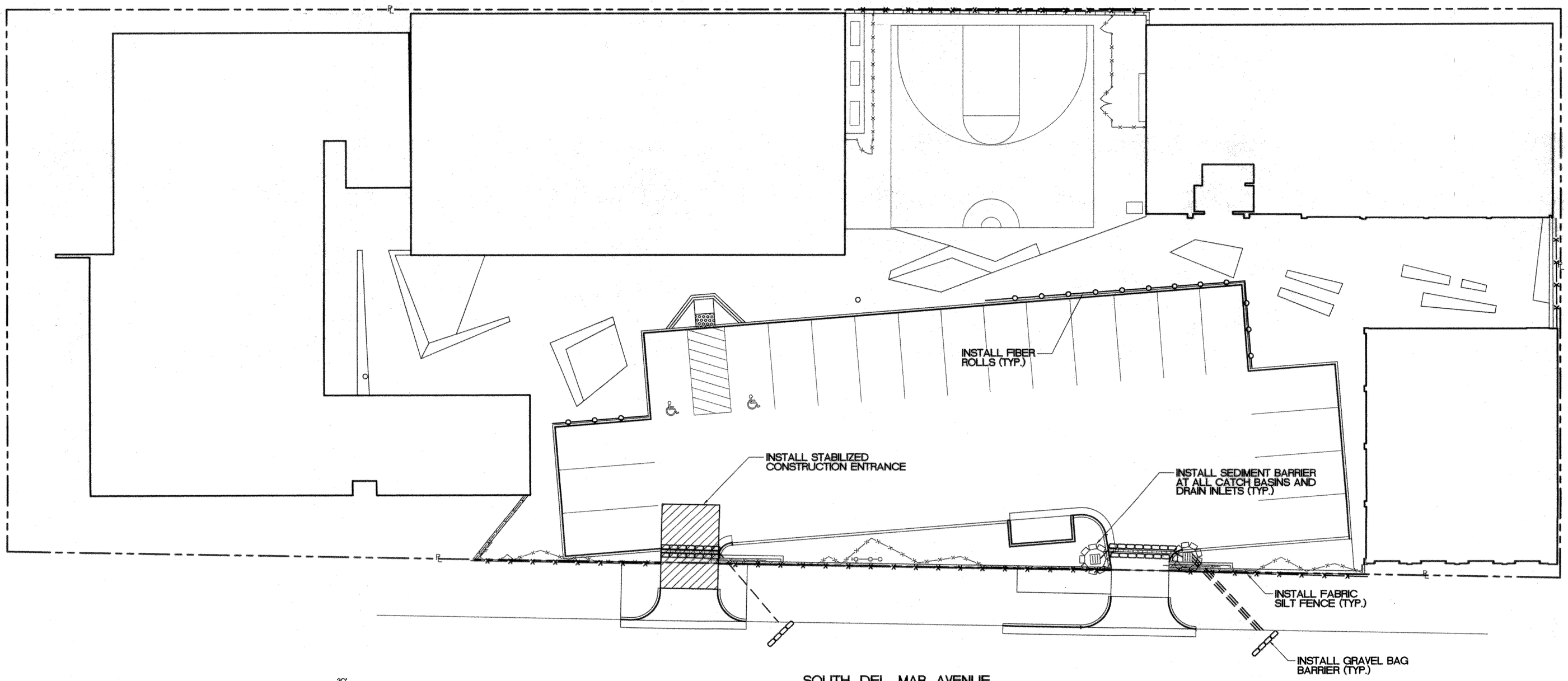

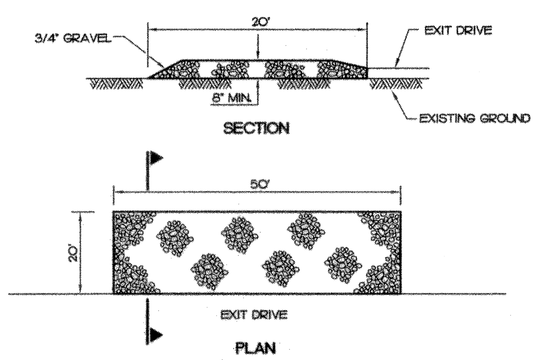

DETAIL: STABILIZED CONSTRUCTION ENTRANCE

NO SCALE

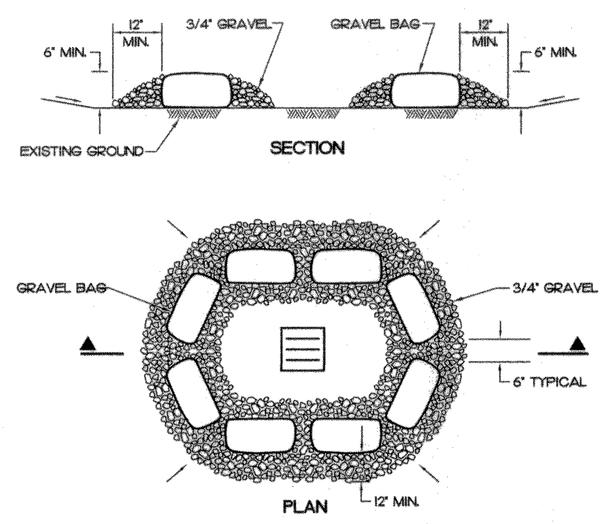

NOTE: CONTRACTOR TO MAINTAIN BARRIER AROUND ALL AREA DRAINS THROUGH THE ENTIRE CONSTRUCTION PERIOD

DETAIL: CATCH BASIN SEDIMENT BARRIER

NO SCALE

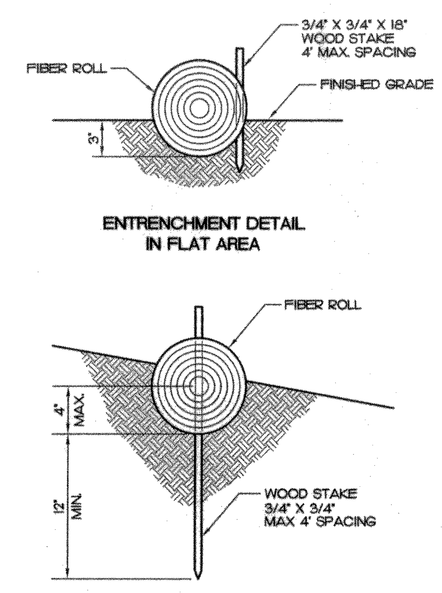

DETAIL: FIBER ROLL

NO SCALE

LEGEND

- STABILIZED CONSTRUCTION ENTRANCE
- SILT FENCE
- GRAVEL BAG BARRIER
- CATCH BASIN SEDIMENT BARRIER
- FIBER ROLL

REFER TO THE "CALIFORNIA STORMWATER BMP HANDBOOK FOR CONSTRUCTION" FOR DETAILS OF REFERENCED BEST MANAGEMENT PRACTICES (BMPS).

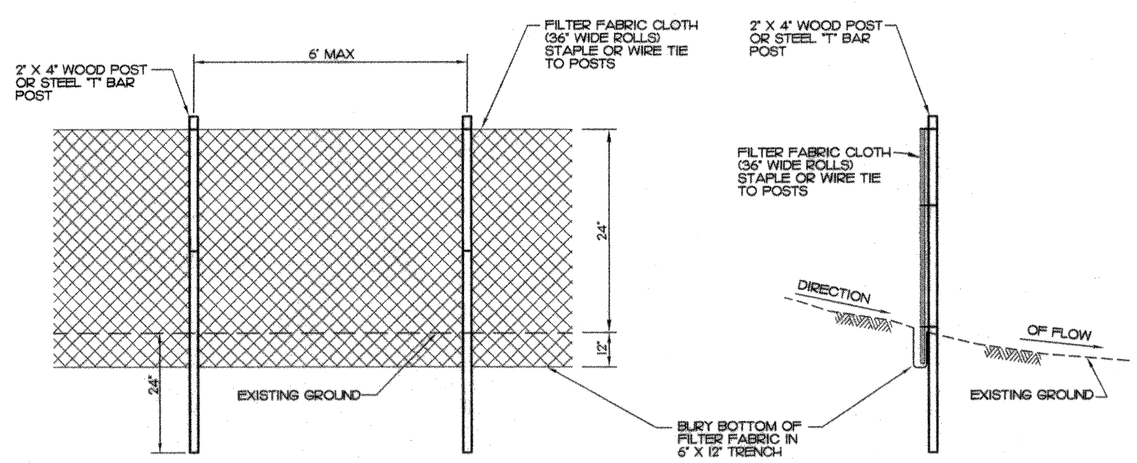

DETAIL: SILT FENCE

NO SCALE

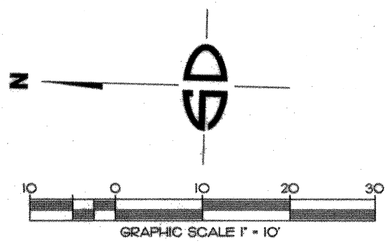

ENGINEER OF WORK

Snipes-Dye associates
civil engineers and land surveyors
8348 CENTER DRIVE, STE. G, LA MESA, CA 91942
TELEPHONE (619) 697-9234 FAX (619) 460-2033
ROBERT L. BRUCKART R.C.E. 48158
EXPIRES 06-30-10

1-28-10

REGISTERED PROFESSIONAL ENGINEER ROBERT L. BRUCKART No. 48158 Exp. 6-30-10 CIVIL STATE OF CALIFORNIA

San Gabriel Unified School District

408 Junipero Serra
San Gabriel, CA 91776

IBI GROUP

ARCHITECTS ENGINEERS PLANNERS

ARCHITECT:
IBI Group
18401 Von Karman Avenue, Suite 110
Irvine, California 92612
Phone 949-833-5588
Fax 949-833-5511

STRUCTURAL ENGINEER:
Martin, Chow & Nakatabara, Inc.
3185-C Airway Avenue
Costa Mesa, CA 92626
Phone 714-979-3003
Fax 714-979-3259

MECHANICAL ENGINEER:
Fundament & Associates
26 Executive Park #100
Irvine, CA 92614
Phone 949-251-1131
Fax 949-251-9434

ELECTRICAL ENGINEER:
FBA
3420 Irvine Avenue, Suite 200
Newport Beach, CA 92660-3189
Phone 714-852-9995
Fax 714-852-1657

CIVIL ENGINEER:
Snipes-Dye Associates
8348 Center Drive, Suite G
La Mesa, CA 91942-2910
Phone 619-697-9234
Fax 619-460-2033

LANDSCAPE ENGINEER:
IBI Group
10 Exchange Place - Suite 112
Salt Lake City, UT. 84111 USA
Phone 801-532-4233
Fax 801-532-4231

IDENTIFICATION STAMP
DIV. OF THE STATE ARCHITECT
OFFICE OF REGULATION SERVICES
03-112620
AC ___ RLS ___ SS ___
DATE ___

LICENSED ARCHITECT KEVIN S. FLEMING NO. C26668 08-31-11 RENEWAL DATE STATE OF CALIFORNIA

This drawing, as an instrument of service, is the property of the Architect and may not be reproduced without their permission and unless the reproduction carries their name. All design and other information show on this drawing are for the use on the specified project only and shall not be used otherwise without written permission of the Architect.

Written dimensions shall have precedence over scaled dimensions. Contractors shall verify and be responsible for all dimensions and conditions on the job and the Architect shall be informed of any variations from the dimensions and conditions show on the drawing. Shop drawings shall be submitted to the Architect for approval before proceeding with fabrication.

Del Mar High School

312 Del Mar Ave
San Gabriel, CA 91776

EROSION CONTROL PLAN

Project Number	20318
Date	FEBRUARY, 2010
Drawn By	BMW
Checked By	RLB
	C0.4
Scale	1" = 10'

B:\20318\20318DEL Del Mar High School\20318\20318-C0.4.dwg
Robert Bruckart January 28, 2010 3:55pm by bruck