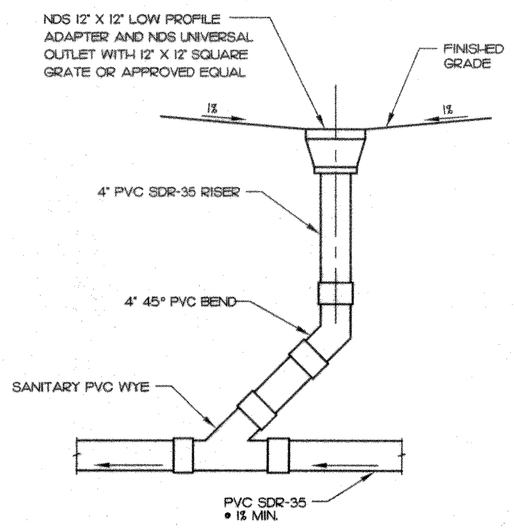

SYMBOL ON PLAN - ⊜

1 DETAIL - 12" X 12" AREA DRAIN

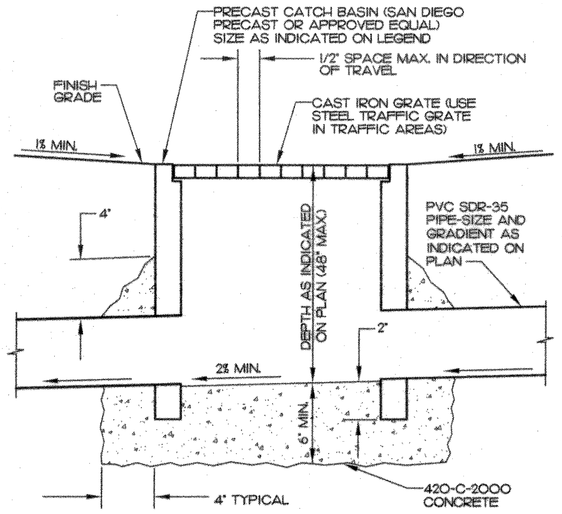

SYMBOL ON PLAN - ▣ 24" X 24" UNLESS OTHERWISE NOTED

2 DETAIL - CATCH BASIN

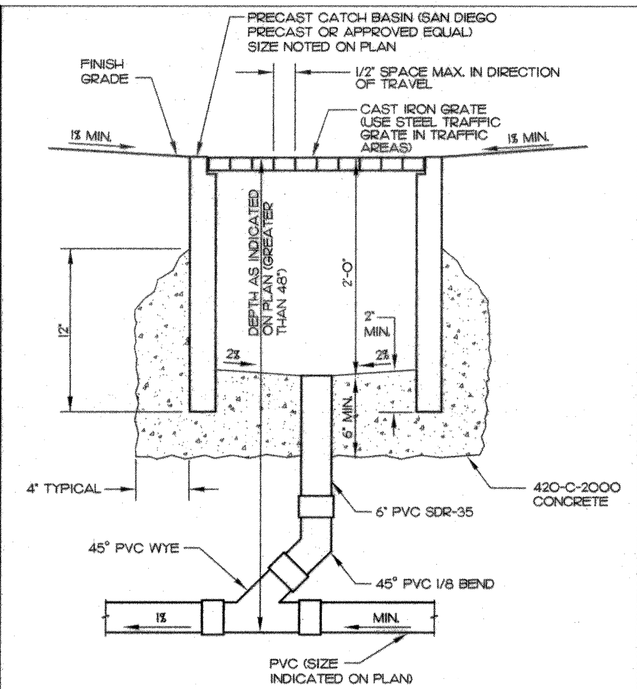

SYMBOL ON PLAN - ▣ 24" X 24" UNLESS OTHERWISE NOTED

3 DETAIL - CATCH BASIN DEEP INSTALLATION

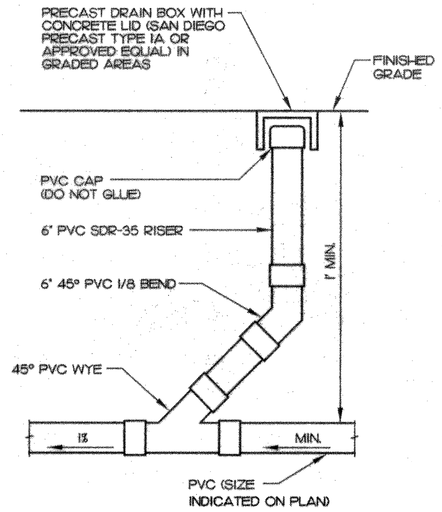

SYMBOL ON PLAN - ○ C.O.

4 DETAIL - STORM DRAIN CLEANOUT GRADED AREA

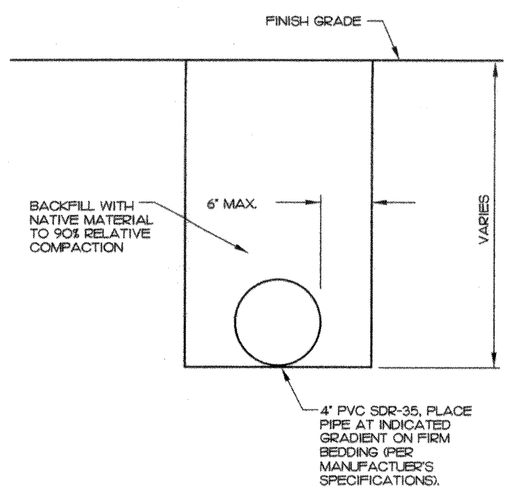

5 DETAIL - TRENCH BACKFILL 4" P.V.C. PIPE

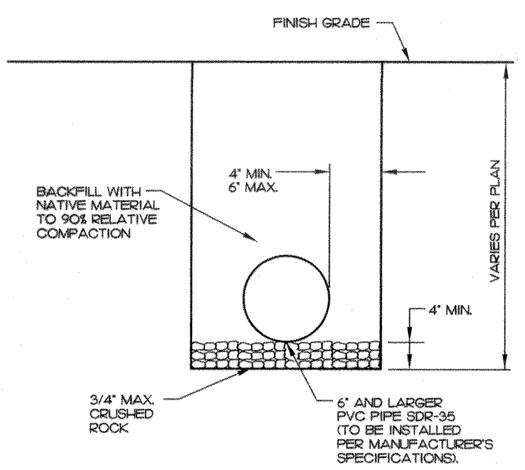

6 DETAIL - TRENCH BACKFILL 6" AND LARGER P.V.C. PIPE

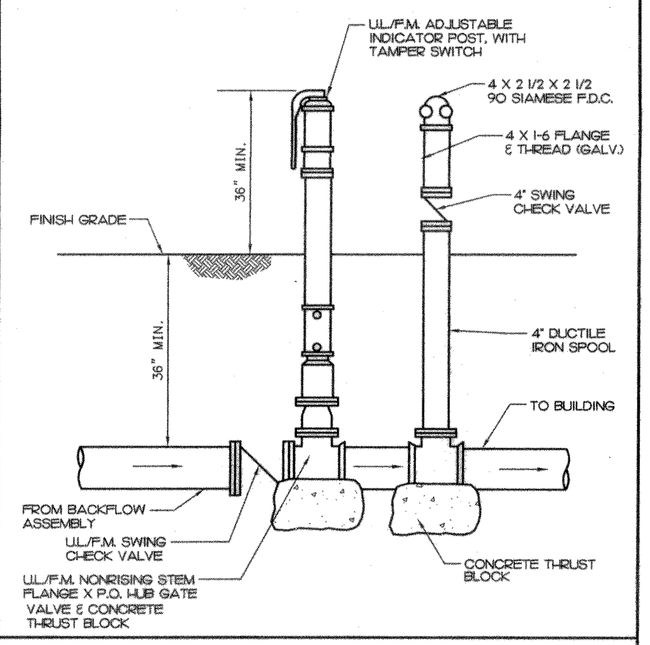

7 DETAIL - FIRE DEPARTMENT CONNECTION

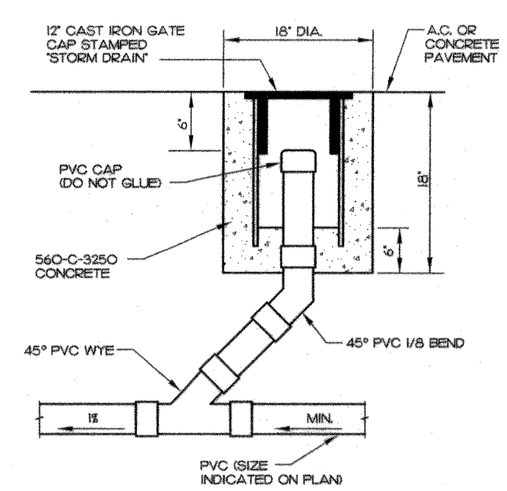

SYMBOL ON PLAN - ○ C.O.

8 DETAIL - STORM DRAIN CLEANOUT PAVEMENT AREA

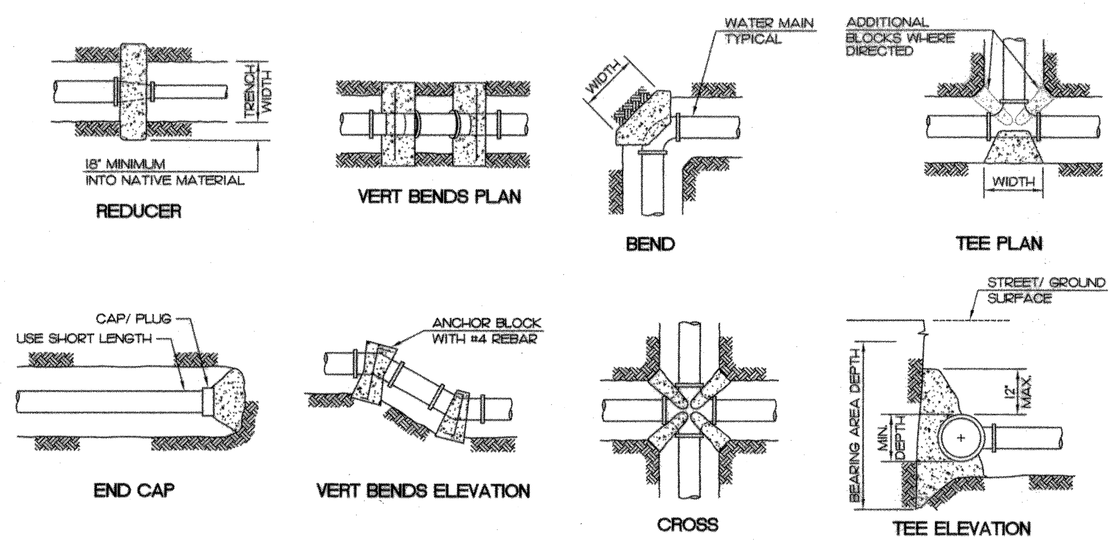

THRUST BLOCKS

THE FOLLOWING THRUST BLOCK SIZES FOR THE ON-SITE FIRE SERVICE ARE DESIGNED FOR A 4" DIAMETER SERVICE. THRUST BLOCK BEARING AREA IS BASED UPON A SOIL BEARING VALUE OF 1500 PSF AND A LINE PRESSURE OF 225 PSI. CONCRETE SHALL BE 520-C-2500.

4" TEE	2 S.F.
4" 90° BEND	3 S.F.
4" 45° BEND	1.5 S.F.
4" 22-1/2° BEND	1 S.F.
4" CAP	2.5 S.F.

USE #4 REBAR TIES AT EACH FITTING

9 DETAIL - CONCRETE THRUST AND ANCHOR BLOCK INSTALLATION

San Gabriel Unified School District

408 Junipero Serra
San Gabriel, CA 91776

IBI GROUP

ARCHITECTS ENGINEERS PLANNERS

ARCHITECT:
IBI Group
18401 Von Karman Avenue, Suite 110
Irvine, California 92612
Phone 949-833-5588
Fax 949-833-5511

STRUCTURAL ENGINEER:
Martin, Chow & Nakabara, Inc.
3185-C Airway Avenue
Costa Mesa, CA 92626
Phone 714-979-3003
Fax 714-979-3259

MECHANICAL ENGINEER:
Fundament & Associates
26 Executive Park #100
Irvine, CA 92614
Phone 949-251-1131
Fax 949-251-9434

ELECTRICAL ENGINEER:
FBA
3420 Irvine Avenue, Suite 200
Newport Beach, CA 92660-3189
Phone 714-852-9995
Fax 714-852-1657

CIVIL ENGINEER:
Snipes-Dye Associates
8348 Center Drive, Suite G
La Mesa, CA 91942-2910
Phone 619-697-9234
Fax 619-460-2033

LANDSCAPE ENGINEER:
IBI Group
10 Exchange Place - Suite 112
Salt Lake City, UT. 84111 USA
Phone 801-532-4233
Fax 801-532-4231

IDENTIFICATION STAMP
DIV. OF THE STATE ARCHITECT
OFFICE OF REGULATION SERVICES
03-112620
AC ___ FLS 3rd SS ___
DATE ___

LICENSED ARCHITECT KEVIN S. FLEMING NO. C26668 08-31-11 RENEWAL DATE STATE OF CALIFORNIA

This drawing, as an instrument of service, is the property of the Architect and may not be reproduced without their permission and unless the reproduction carries their name. All design and other information show on this drawing are for the use on the specified project only and shall not be used otherwise without written permission of the Architect.

Written dimensions shall have precedence over scaled dimensions. Contractors shall verify and be responsible for all dimensions and conditions on the job and the Architect shall be informed of any variations from the dimensions and conditions show on the drawing. Shop drawings shall be submitted to the Architect for approval before proceeding with fabrication.

Del Mar High School

312 Del Mar Ave
San Gabriel, CA 91776

DETAIL SHEET

Project Number	20318
Date	FEBRUARY, 2010
Drawn By	BMW
Checked By	RLB
Scale	NO SCALE

C0.2

ENGINEER OF WORK

Snipes-Dye associates
civil engineers and land surveyors
8348 CENTER DRIVE, STE. G, LA MESA, CA 91942
TELEPHONE (619) 697-9234 FAX (619) 460-2033

2-17-10
ROBERT L. BRUCKART R.C.E. 48158
EXPIRES 06-30-10

REGISTERED PROFESSIONAL ENGINEER ROBERT L. BRUCKART No. 48158 Exp. 6-30-10 CIVIL STATE OF CALIFORNIA

S:\SNPDS\20020-Del Mar High School\dwg\PC\020020-C0.2.dwg
Plotted Wednesday, February 17, 2010 9:58am by bwm1